THERMOSTATIC MIXING VALVES

HWC KIT UPTT
SERIES KTE400

Connection kit with external thread and check valves for easy connection of UPTT to a hot water circulation system (HWC).

KTE400
Rotating nut/
External thread

VERSIONS
The kit contains a cross piece with flow limitation on one port, and one integrated checkvalve, connection pieces with rotary nuts and external thread, 2 integrated checkvalves, nuts and gaskets.

SUITABLE VALVES
The connection kit series KTE412 is optimal for use with a UPTT522, but can fit on other G 1¼" valves as well:

- Series UPTT522
- Series VTA522
- Series VTA552
- Series VTS522
- Series VTS552

TECHNICAL DATA
Pressure class: PN10
Media temperature: max. +120°C
min. -20°C
Connection: External thread (R), EN 10226-1
Internal thread (G), ISO 228/1

Material
Nut: Brass CW 614N
Connection piece: Dezincification resistant brass, DZR*
Gasket: Unitec 300

* Suitable for drinking water applications

PED 2014/68/EU, article 4.3

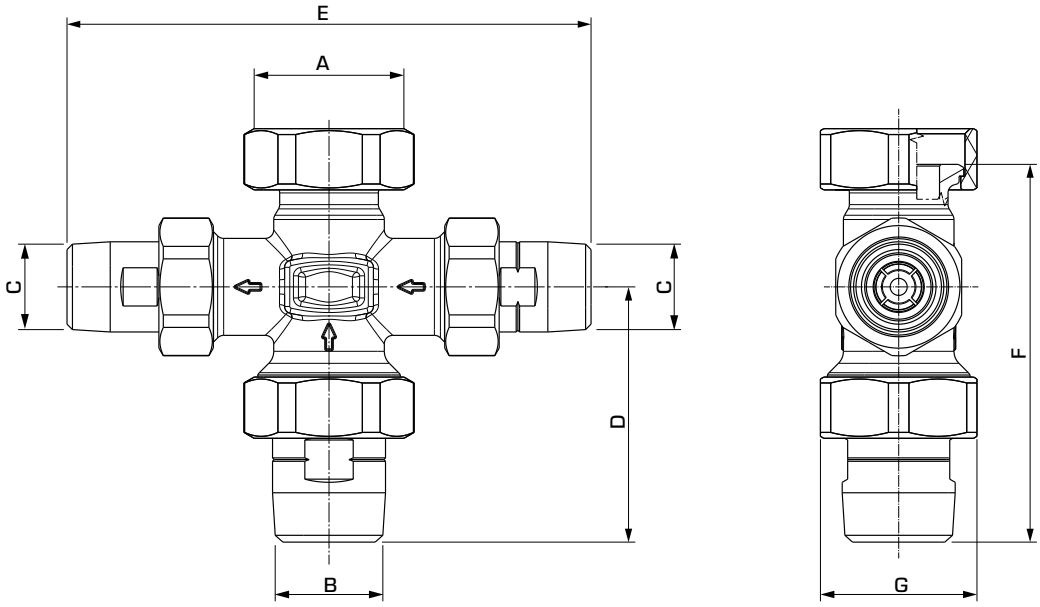

SERIES KTE400, ROTATING NUT AND EXTERNAL THREAD

Art. No.	Reference	Connection			Dimension [mm]				Weight [kg]	Note
		A	B	C	D	E	F	G		
36554800	KTE412	RN 1¼"	R 1"	R ¾"	75	154	111	46	0,85	

RN = Rotary nut

© Copyright. Rights reserved to make alterations.

HWC KIT UPTT
SERIES KTE400

INSTALLATION EXAMPLES

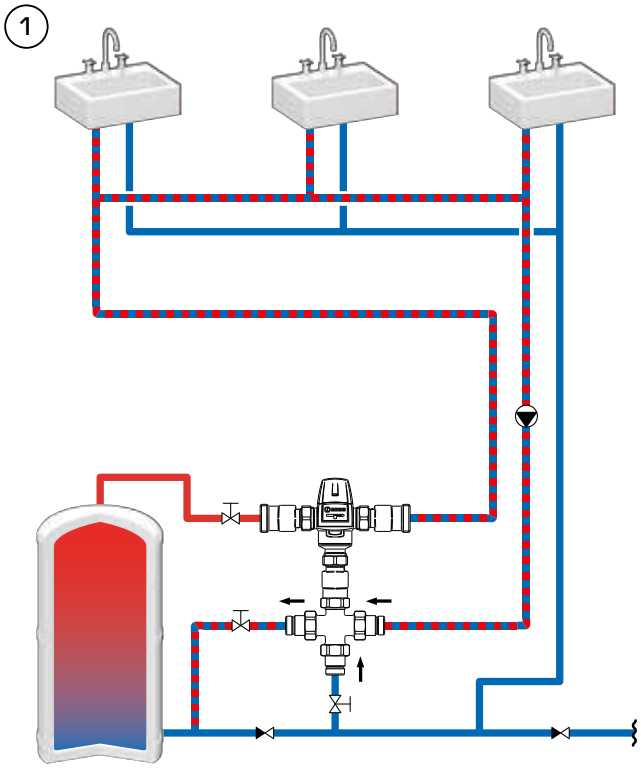

ESBE series KTE412 is great to pair with the ESBE UPTT500 in a hot water circulation system (HWC). A system with HWC secures the temperature in the hot water system and helps protect against legionella in the system. It can also save many liters of water and improve comfort with instant hot water in the faucets – no need for flushing loads of water to get the temperature you want. Even if the kit is optimal for use with the UPTT522, the standard G 1¼" connection allows you to fit other thermostatic valves as well.

© Copyright. Rights reserved to make alterations.