LINEAR VALVES

FAN COIL VALVE
SERIES VLG100

ESBE Valve Series VLG100 is a linear valve suitable for the ESBE linear actuators ALG400. The valves are available in 2-way, 3-way or 3-way with by-pass.

VLG122
2-way

VLG132
3-way

VLG142
3-way with by-pass

APPLICATION
The ESBE series VLG100 is suitable for the control of heated and chilled water in heating, air-conditioning plants and fan coil units. Valves are motorized by ALG400 (electro-thermal actuators). VLG100 has compact dimensions to enable an easy mounting within limited spaces for example on terminal unit coils.

OPERATION
The actuator is able to operate in any mounting position, but it is advisable not to install it down-wards. 3-way and 3-way with by-pass valves should preferably be used as mixing valves. Valves are designed to fulfil water qualities according to VDI 2035.

FUNCTION
Valves can be mounted with diverter function but will have limited usage ie maximum allowed is then limited to 1/3 of differential pressure drop in mixing function. Valves are normally closed without actuator ie stem is closing upwards. The combination with ESBE actuator ALG400 is also normally closed with stem going upwards.

VERSIONS
The series consist of 3 different versions:
- VLG122 2-way with external thread (flat sealing)
- VLG132 3-way with external thread (flat sealing)
- VLG142 3-way with by-pass and external thread (flat sealing)

SUITABLE ACTUATORS
- ALG400

TECHNICAL DATA

Pressure class:	PN 16
Stroke:	2,5 mm
Leakage:	0%
Temperature:	max. +95°C
	min. +5°C
Media:	Heating water (in accordance with VDI2035)
	Water / Glycol mixtures, max. 50%
	Water / Ethanol mixtures, max. 28%
Connection:	External thread (G), ISO 228/1

Material

Body:	Brass CW617N
Stem:	PPS, GF50%
Seallings, O-ring:	EPDM
Spring:	Stainless steel

Conformities and certificates:

PED 2014/68/EU, article 4.3

VALVE MOUNTING

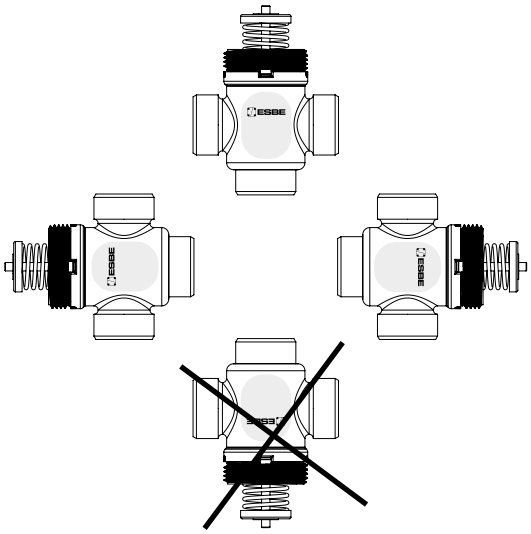

© Copyright. Rights reserved to make alterations.

FAN COIL VALVE
SERIES VLG100

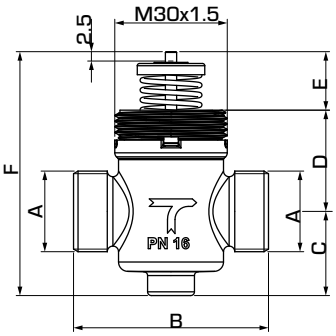

VLG122

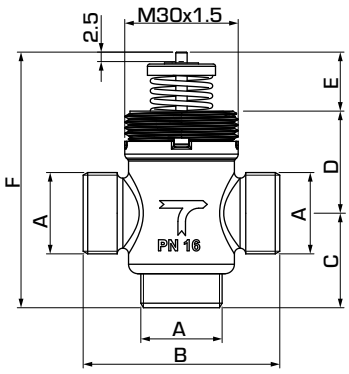

VLG132

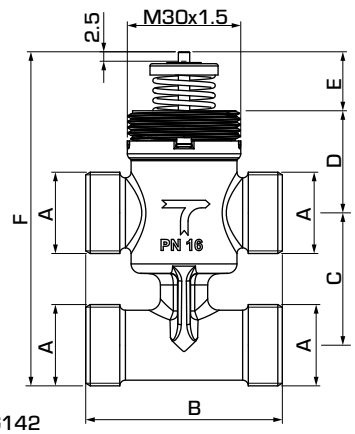

VLG142

2-WAY VALVE SERIES VLG122

Art. No.	Reference	DN	Kvs*	A	B	C	D	E	F	Weight [kg]	Note
21500100	VLG122	15	0,25	G ½"	52	23	27	16	65	0,12	
21500200			0,4							0,12	
21500300			0,6							0,12	
21500400			1							0,12	
21500500			1,6							0,12	
21500600		20	2,5	G ¾"	56	24	26	16	65	0,15	

* Kvs-value in m^3/h at a pressure drop of 1 bar.

3-WAY VALVE SERIES VLG132

Art. No.	Reference	DN	Kvs* A	Kvs* B	ΔP	A	B	C	D	E	F	Weight [kg]	Note
21501300	VLG132	15	0,6	0,6	4	G ½"	52	25	27	16	65	0,13	
21501400			1	0,6	3,5							0,13	
21501500			1,6	1	3,5							0,13	
21501600		20	2,5	1,6	3,5	G ¾"	56	34	26	16	75	0,17	
21501700			4	2,5	1 (0,4)		78	36	41		92	0,41	

3-WAY VALVE WITH BY-PASS SERIES VLG142

Art. No.	Reference	DN	Kvs* A	Kvs* B	ΔP	A	B	C	D	E	F	Weight [kg]	Note
21502100	VLG142	15	0,25	0,25	4	G ½"	52	35	27	16	88	0,20	
21502200			0,4	0,4	4							0,20	
21502300			0,6	0,6	4							0,20	
21502400			1	0,6	3,5							0,20	
21502500			1,6	1	3,5							0,20	
21502600		20	2,5	1,6	3,5	G ¾"	56	50	26	16	98	0,27	

* Kvs-value in m^3/h at a pressure drop of 1 bar.

© Copyright. Rights reserved to make alterations.

FAN COIL VALVE
SERIES VLG100

VALVE CHARACTERISTICS

Port A
Port B

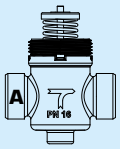

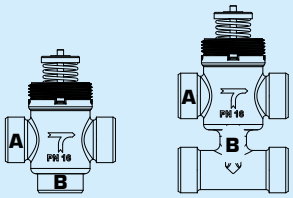

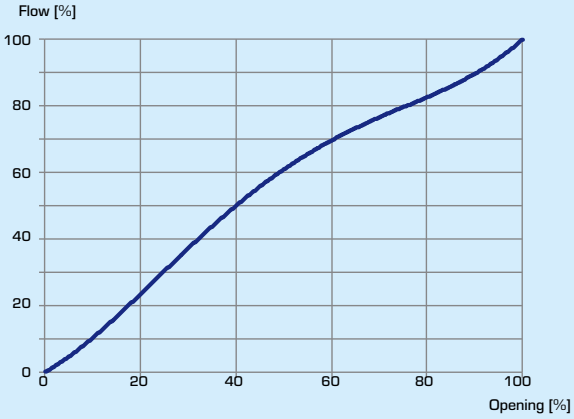

VLG122, Kvs 0.25, 0.4, 0.63

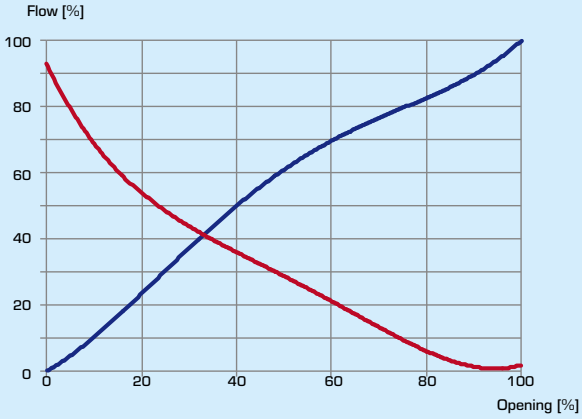

VLG132/VLG142, Kvs 0.25, 0.4, 0.63

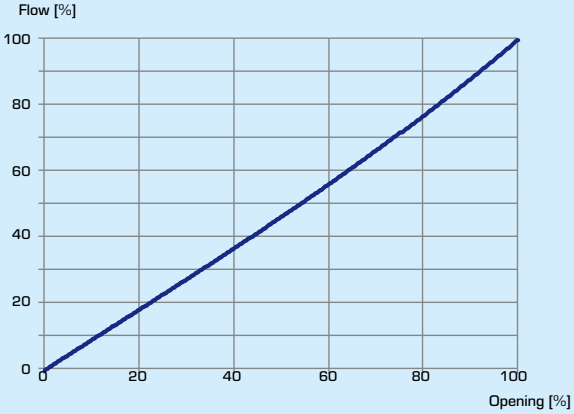

VLG122, Kvs 1.0, 1.6

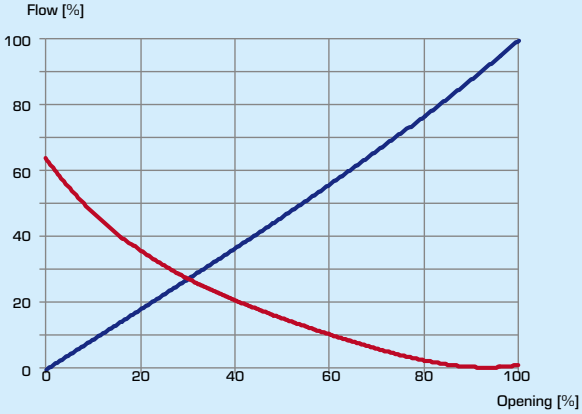

VLG132/VLG142, Kvs 1.0, 1.6

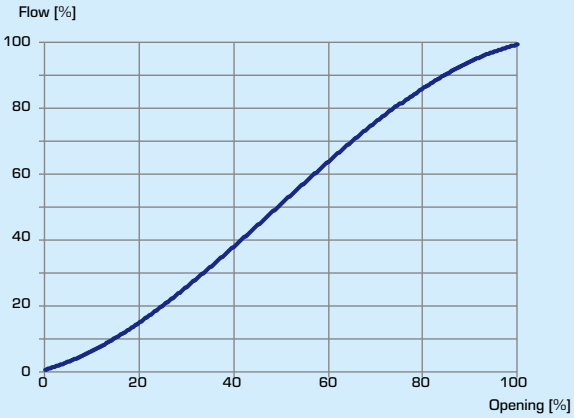

VLG122, Kvs 2.5

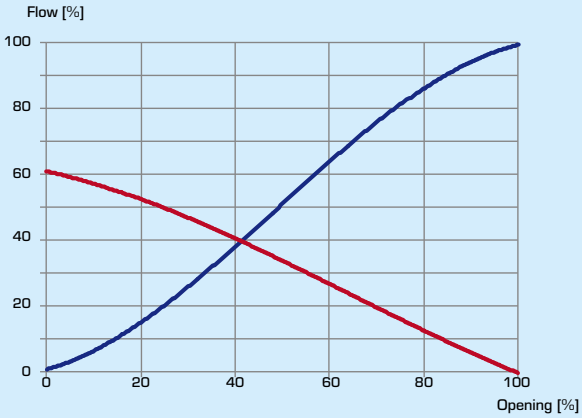

VLG132/VLG142, Kvs 2.5, 4

© Copyright. Rights reserved to make alterations.

FAN COIL VALVE
SERIES VLG100

FLOW CHART
To be considered: As both the viscosity and the thermal conduction are affected when glycol is added to the system water, this fact has to be considered when dimensioning the valve.

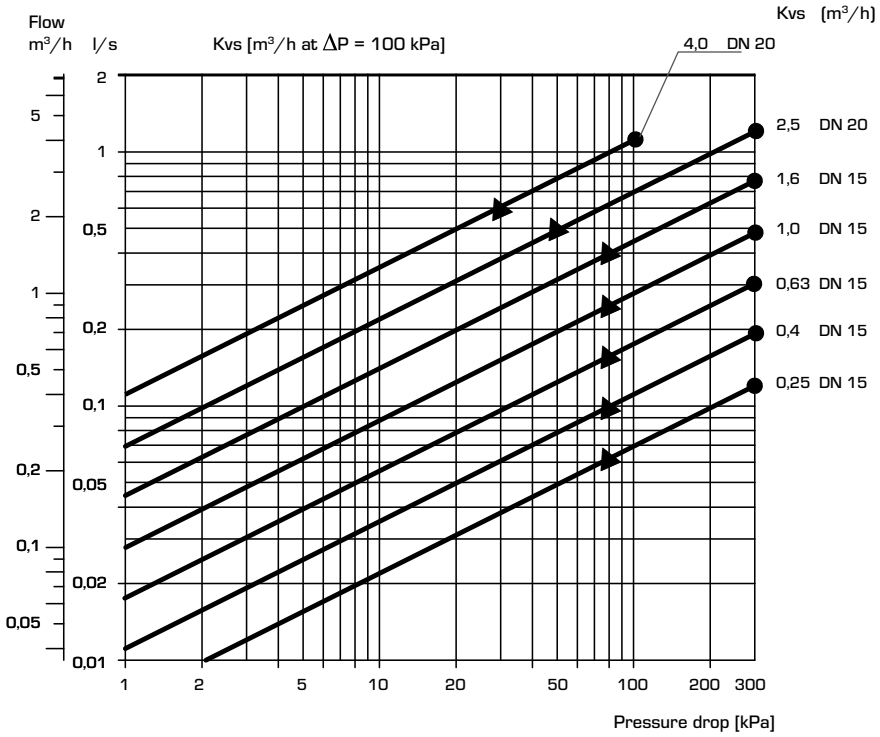

● = max differential pressure drop allowed in mixing function
▲ = max differential pressure drop allowed in diverting function

INSTALLATION EXAMPLES

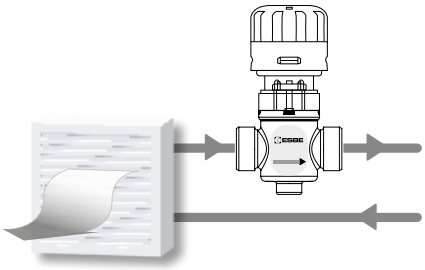

VLG122

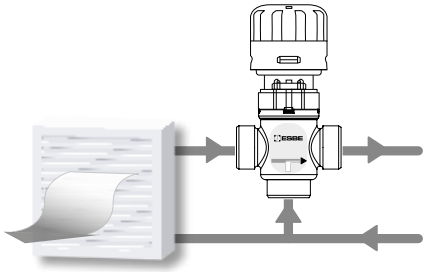

VLG132

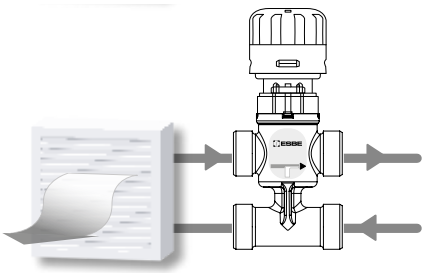

VLG142

© Copyright. Rights reserved to make alterations.