CIRCULATION UNIT
DIRECT SUPPLY, SERIES GDxX00

GDA311 GDA394 GDA211 GDA212 GDF111

PRODUCT DESCRIPTION

The direct groups are used for the direct energy distribution in the heating systems, which means that the heating water is delivered to the heating receiver with the same temperature that leaves the heating source. The groups are used in the systems where the heating source is controlling the heating water temperature e.g. through a weather compensated control - in this case no additional mixing / heating water control is needed. The groups can also be used if the heating water needs to be ''transported'' to an accumulation tank, or for heating water distribution in bigger systems (so called central distribution pump groups). Another application area for the direct group is for potable water heating in combination with potable water tank equipped with heating coil or tank in tank solutions.

The units are equipped with two shut-off valves with colour coded thermometers, one shut-off valve placed directly under the pump and one check valve placed under the return from the heating circuit and insulation shell.

When designing the circulation unit product line ESBE focused on performance, user friendly usage, environment and design. This applies to everything from manufacturing, material and packaging.

KEY BENEFITS

- High class insulation of hydronic parts
- Compact design
- Pre tested and ready to use
- Ready for 180mm pumps - applies to GDF100
- Adjustable insulation shell - applies to GDF100
- Symmetric design for left/right pump placement
- Designed to last and perform
- High-end product finish

VERSIONS

ESBE direct supply circulation units are available in three different version; standard design with and without pump, and a compact design for areas where space is limited. The compact version can be delivered with and without insulation shell.

SERIES GDA200

The ESBE Series GDA200 is a direct supply circulation unit equipped with a pump. The series comes in two sizes, DN25 and DN32 and with the ability to choose pump, Wilo or Grundfos. The pumps can be set to constant speed, variable pressure or constant pressure. The Grundfos pumps come with AutoADAPT feature which adjust the available pump pressure and the flow to the current system requirements.

The compact design of the unit has been thought through, focus put on chosen components such a pump resulted in high performance of the circulation unit.

SERIES GDA300

The ESBE Series GDA300 is a compact but powerful direct supply circulation unit designed for applications where space matters, however there is no room for compromises. The GDA300 is a DN20 circulation unit with performance equals the corresponding DN25 groups. This is possible by adjusting the pump curves and consider the pressure losses in the group. By putting focus on performance, we achieved the smallest circulation unit with unique pump curves which are covering low and high demands.

The GDA310 is equipped with a Wilo PARA STG 15/8 which can be set to variable or constant pressure, and iPWM1/2.

The GDA390 is equipped with a Wilo PARA 15/6 which can be set to constant speed, variable pressure or constant pressure. The GDA390 is the only version that isn't equipped with insulation shell.

SERIES GDF100

The ESBE Series GDF100 is a direct supply circulation unit, available in size DN25, designed to be used with almost any 180mm pump available on the market. The group is equipped with an insulation shell which can be adjusted according to the pump design, even if the pump is delivered with its own insulation. ESBE have put a lot of effort to make the adjustment process easy and clear, and to make the result of product adjustment look like factory assembled.

SERVICE AND MAINTENANCE

The circulation unit does not require any specific maintenance under normal conditions.

RELATED ACCESSORIES

ESBE Manifold

Manifolds for Series GDF100 and GDA200. See separate data sheet for further detailed information.

Manifolds for 1, 2, or 3 circulation units with integrated hydraulic separation.

Art. No.	
66001100	GMA411- for 1 unit
66001600	GMA521 - for 2 units
66001700	GMA531 - for 3 units

Manifold for 2, 3, 4 or 5 circulation units without integrated hydraulic separation function.

Art. No.	
66001200	GMA421- for 2 units
66001300	GMA431 - for 3 units
66001400	GMA441 - for 4 units
66001500	GMA451 - for 5 units

>>>

CIRCULATION UNIT
DIRECT SUPPLY, SERIES GDxX00

Manifold for Series GDA300 without integrated hydraulic separation function. See separate data sheet for further detailed information.
Art. No.
66000500 _____ GMA321- for 2 units
66000600 _____ GMA331 - for 3 units

ESBE Manifold Box
Manifold Box for Series GDA300 with option of hydraulic separation easily set with a screw. See separate data sheet for further detailed information.

Art. No.

66000700 _____ GMB631 for 2 or 3 units

CIRCULATION UNIT

DIRECT SUPPLY, SERIES GDxX00

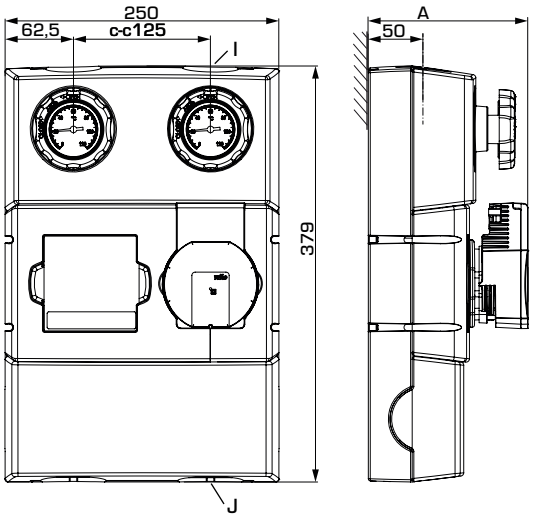

GDA211

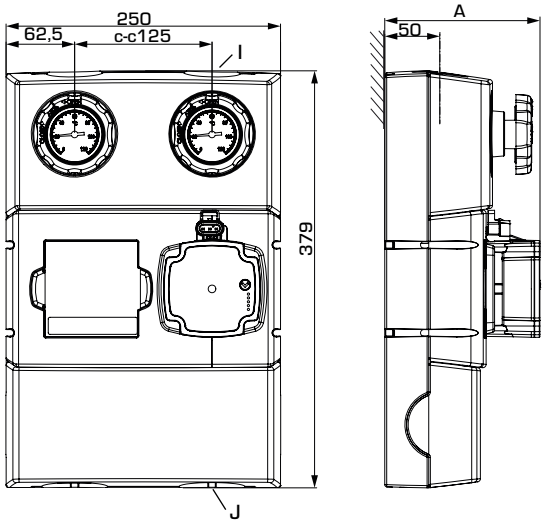

GDA212

SERIES GDA200

Art. No.	Reference	DN	Pump	Connections I	Connections J	A	Weight [kg]	Note
61001100	GDA211	25	Wilo PARA 25/6	G 1"	G 1½"	146	5,0	Replaces 61000100
61001200		32	Wilo PARA 25/8	G 1¼"	G 1½"	157	5,3	Replaces 61000200
61001300	GDA212	25	Grundfos UPM3 AUTO 25-50	G 1"	G 1½"	141	5,1	Replaces 61000300
61001400		32	Grundfos UPM3 AUTO 25-70	G 1¼"	G 1½"	141	5,2	Replaces 61000400

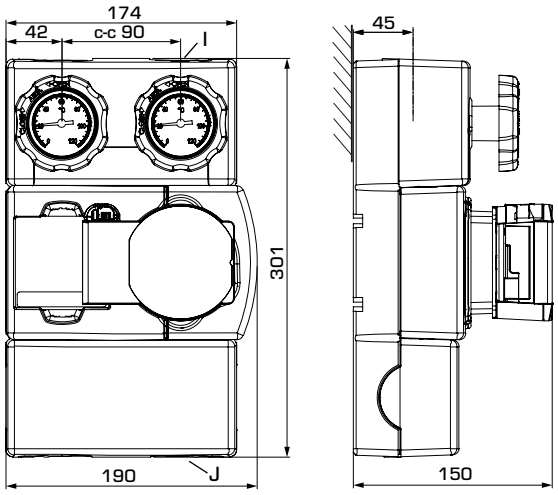

GDA311

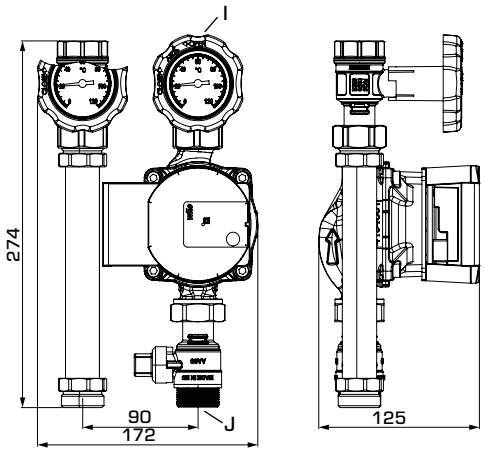

GDA394

SERIES GDA300

Art. No.	Reference	DN	Pump	Connections I	Connections J	Weight [kg]	Note
61003200	GDA311	20	Wilo PARA STG 15/8	G ¾"	G 1"	3,9	Replaces 61003100
61005200	GDA394		Wilo PARA 15/6			3,2	without insulation shell

CIRCULATION UNIT

DIRECT SUPPLY, SERIES GDxX00

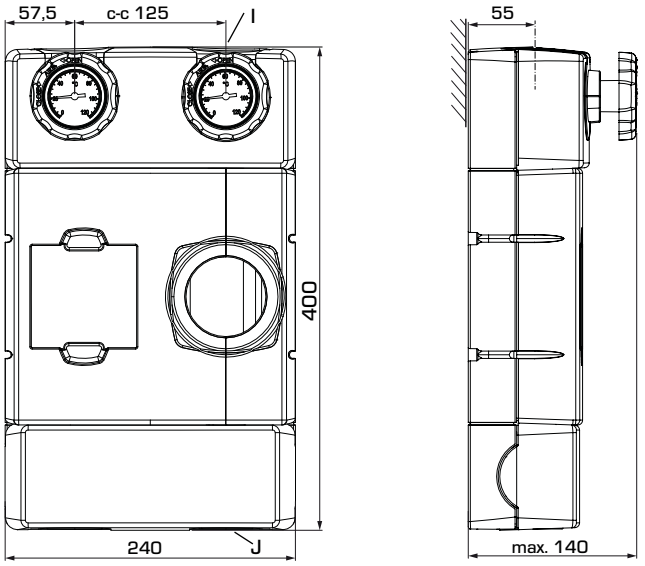

GDF111

SERIES GDF100

Art. No.	Reference	DN	Connections		Weight [kg]	Note
			I	J		
61200100	GDF111	25	G 1"	G 1½"	3,0	

DIMENSIONING, CIRCULATION UNIT CHARACTERISTICS - PRESSURE LOSSES GDF111

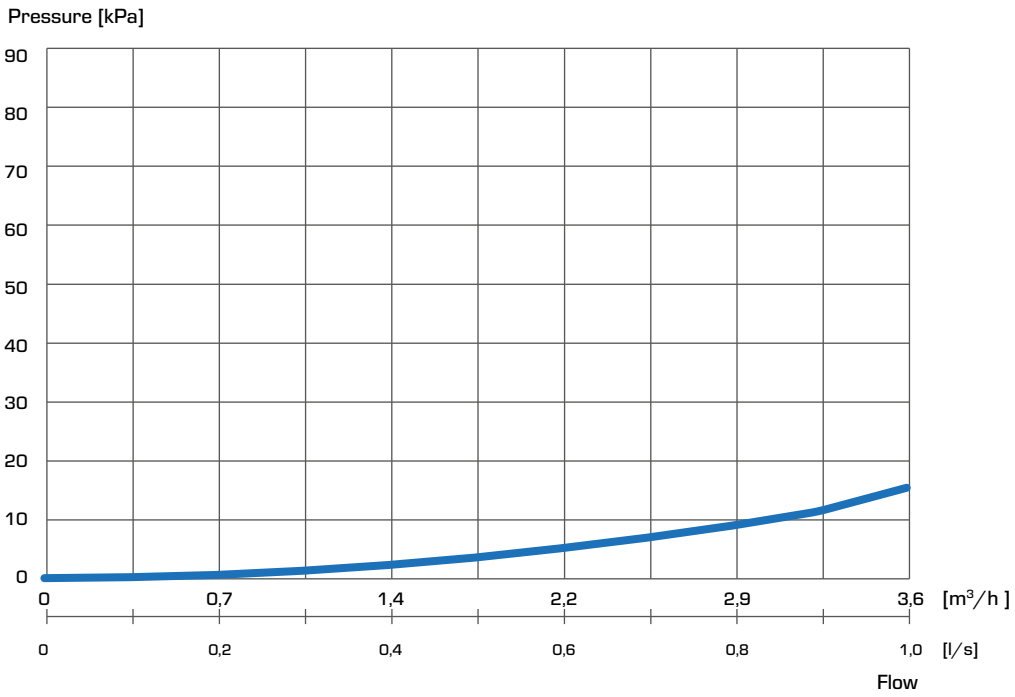

CIRCULATION UNIT
DIRECT SUPPLY, SERIES GDxX00

TECHNICAL DATA Visit esbe.eu for further detailed information.

The Circulation unit, in general

Pressure class: PN 10
Working pressure: 1,0 MPa (10 bar)
Connections, Internal thread (G), ISO 228/1
External thread (G), ISO 228/1
Insulation: EPP λ 0,036 W/mK
EnEV2014

Media: Heating water (in accordance with VDI2035)
Water / Glycol mixtures, max. 50%.
Water / glycol mixtures are affecting the pump performance. In case of Applications where water / glycol mixtures are used, pump performance should be considered.

Series GDA211

Media temperature: max. +100°C
min. +5°C
Ambient temperature: max. +58°C
min. 0°C
Pump type, DN25: Wilo PARA 25-130/6-43 SC
DN32: Wilo PARA 25-130/8-75 SC
Power supply: 230 ± 10% V AC, 50/60 Hz
Power consumption - Wilo PARA 25/6: 3-43 W
- Wilo PARA 25/8 10-75 W
Enclosure rating: IP X4D
Insulation class: F

EEI (Energy Efficiency Index) - Wilo PARA 25/6: <0,20
- Wilo PARA 25/8: <0,21

Material, in contact with water

Components: Brass, Cast iron, Steel
Sealing material: PTFE, Aramid fibre, EPDM

Conformities and certificates

LVD 2014/35/EU
EMC 2014/30/EU
RoHS3 2015/863/EU
ErP 2009/125/EU

SI 2016 No. 1101
SI 2016 No. 1091
SI 2012 No. 3032
SI 2010 No. 2617

PED 2014/68/EU, article 4.3 / SI 2016 No. 1105 (UK)

Series GDA212

Media temperature: max. +110°C
min. +5°C
Ambient temperature: max. +70°C
min. 0°C
Pump type, DN25: Grundfos UPM3 AUTO 25-50 130
DN32: Grundfos UPM3 AUTO 25-70 130
Power supply: 230 ± 10% V AC, 50/60 Hz
Power consumption - Grundfos UPM3 AUTO 25-50: 4-33 W
- Grundfos UPM3 AUTO 25-70 2-52 W
Enclosure rating: IP 44
Insulation class: N/A

EEI (Energy Efficiency Index): <0,20

Material, in contact with water

Components: Brass, Cast iron, Steel
Sealing material: PTFE, Aramid fibre, EPDM

Conformities and certificates

LVD 2014/35/EU
EMC 2014/30/EU
RoHS3 2015/863/EU
ErP 2009/125/EU

SI 2016 No. 1101
SI 2016 No. 1091
SI 2012 No. 3032
SI 2010 No. 2617

PED 2014/68/EU, article 4.3 / SI 2016 No. 1105 (UK)

Series GDA300

Media temperature: max. +100°C
min. +5°C
Ambient temperature: max. +58°C
min. 0°C
Pump type, GDA311: Wilo PARA STG 15-130/8-60/0
GDA394: Wilo PARA 15-130/6-43 SCU
Power supply: 230 ± 10% V AC, 50/60 Hz
Power consumption: 2-60 W
Enclosure rating: IP X4D
Insulation class: F

EEI (Energy Efficiency Index): <0,20

Material, in contact with water

Components: Brass, Cast iron, Steel
Sealing material: PTFE, Aramid fibre, EPDM

Conformities and certificates

LVD 2014/35/EU
EMC 2014/30/EU
RoHS3 2015/863/EU
ErP 2009/125/EU

SI 2016 No. 1101
SI 2016 No. 1091
SI 2012 No. 3032
SI 2010 No. 2617

PED 2014/68/EU, article 4.3 / SI 2016 No. 1105 (UK)

Series GDF100

Media temperature: max. +100°C*
min. +5°C*
Ambient temperature: max. +60°C*
min. 0°C*
*consider data for choosen pump
Pump type: N/A

Material, in contact with water

Components: Brass, Steel
Sealing material: PTFE, Aramid fibre, EPDM

Conformities and certificates

PED 2014/68/EU, article 4.3 / SI 2016 No. 1105 (UK)

WIRING

Please see the Installation Instruction

CIRCULATION UNIT
DIRECT SUPPLY, SERIES GDxX00

DIMENSIONING, PUMP CAPACITY DIAGRAM

Example: Start with the heat demand of the heating circuit (e.g. 25 kW) and move horizontally to the right in the diagram to the Δt = 10°C (temperature difference between flow and return of the heating circuit). Next go up and find the possible duty points.

Setting I gives duty point A with a residual head of 40 kPa for DN32. Setting II and III gives duty point B with a residual head of 50 kPa for DN32.

SERIES GDA211 — Constant differential pressure, Wilo pump

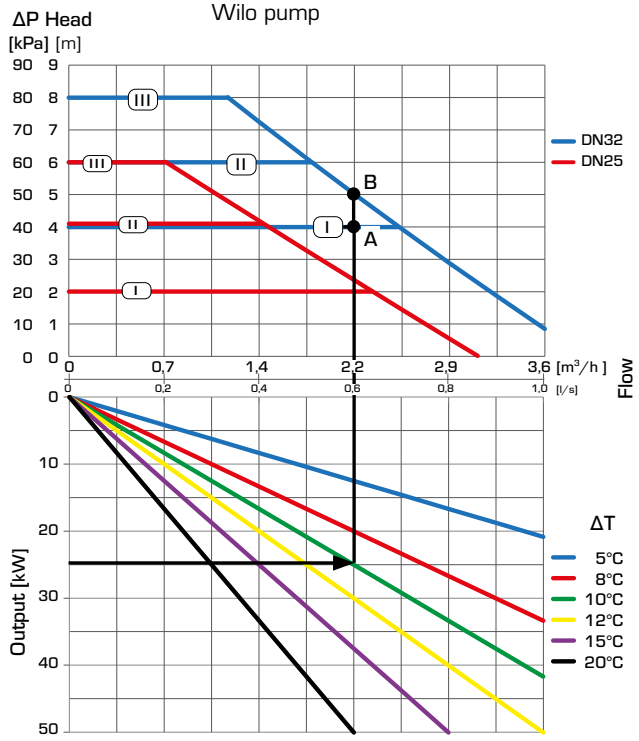

SERIES GDA211 — Variable differential pressure, Wilo pump

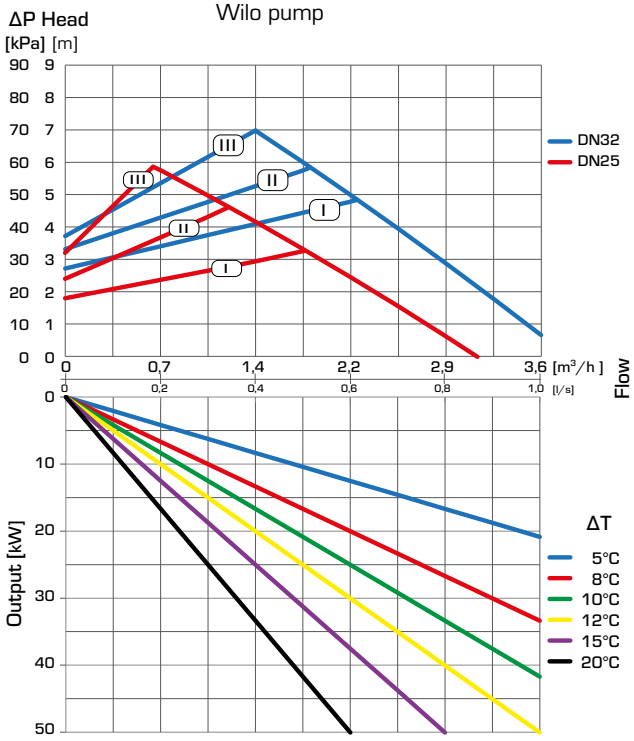

SERIES GDA211 — Constant speed, Wilo pump

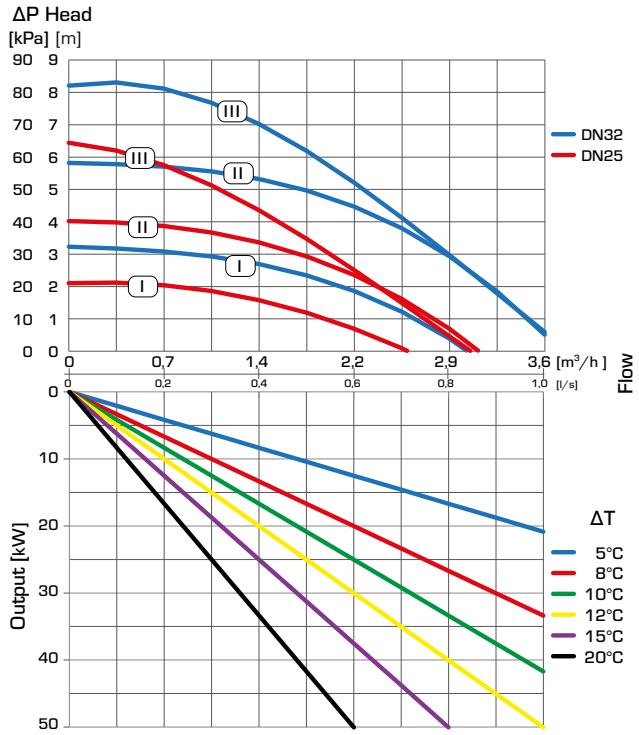

CIRCULATION UNIT
DIRECT SUPPLY, SERIES GDxX00

DIMENSIONING, PUMP CAPACITY DIAGRAM

Example: Start with the heat demand of the heating circuit (e.g. 30 kW) and move horizontally to the right in the diagram to the Δt = 10°C (temperature difference between flow and return of the heating circuit). Next go up and find the possible duty points.

Setting I gives duty point A with a residual head of 16 kPa for DN32. Setting II and III gives duty point B with a residual head of 28 kPa for DN32.

SERIES GDA212 — Constant differential pressure, Grundfos pump

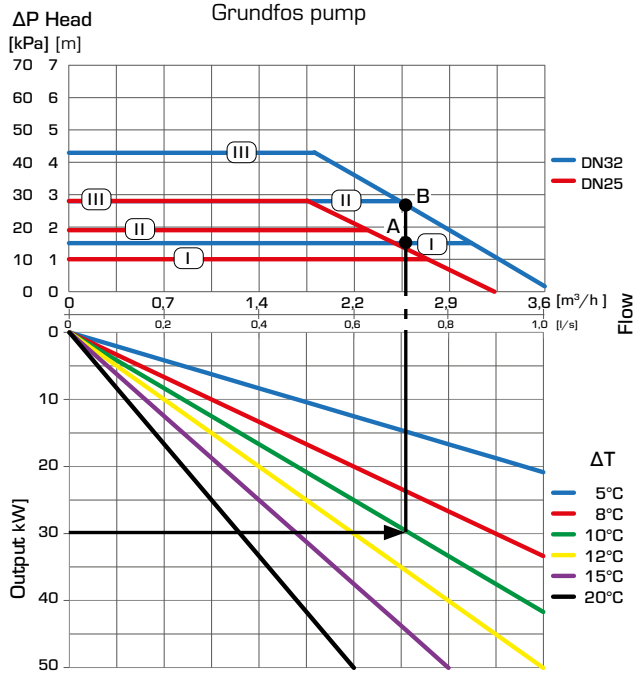

SERIES GDA212 — Variable differential pressure, Grundfos pump

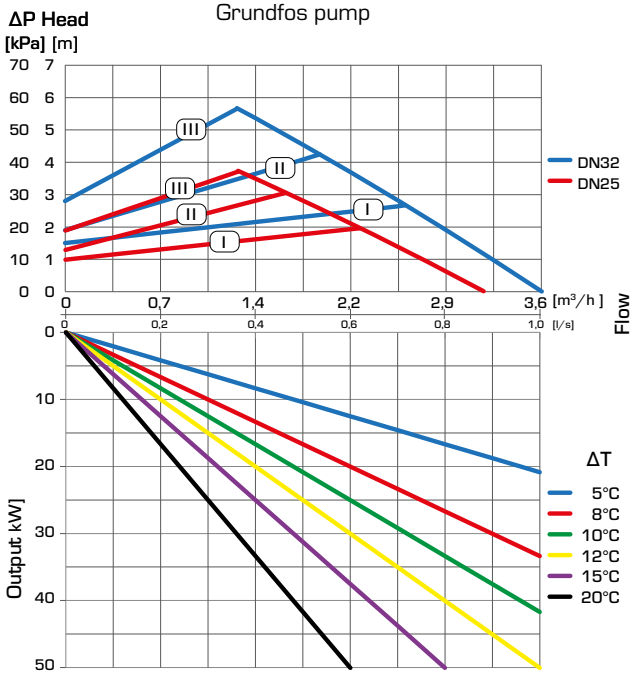

SERIES GDA212 — Constant speed, Grundfos pump

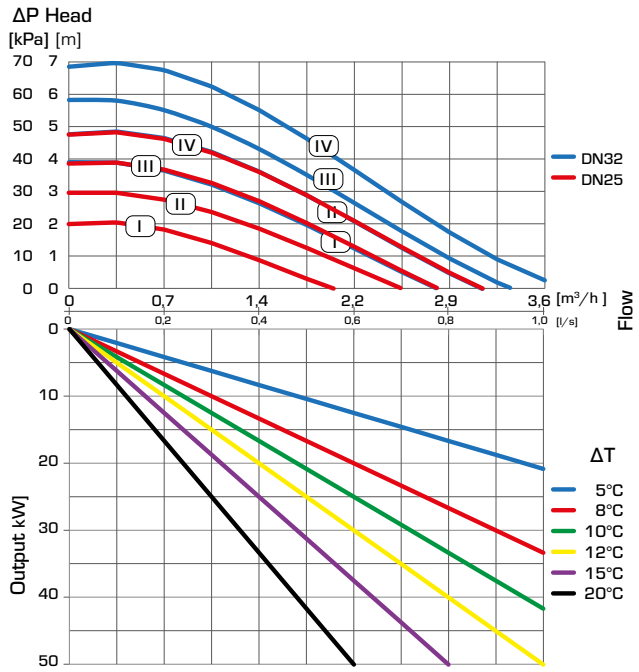

CIRCULATION UNIT
DIRECT SUPPLY, SERIES GDxX00

DIMENSIONING, PUMP CAPACITY DIAGRAM

Example: Start with the heat demand of the heating circuit (e.g. 25 kW) and move horizontally to the right in the diagram to the choosen Δt, which is the temperature difference between flow and return of the heating circuit (e.g. 10°C). Next go up and find the possible duty points.

Setting I gives duty point A with a residual head of 18 kPa. Setting II and III gives duty point B with a residual head of 27 kPa.

SERIES GDA311 — Constant differential pressure, Wilo pump

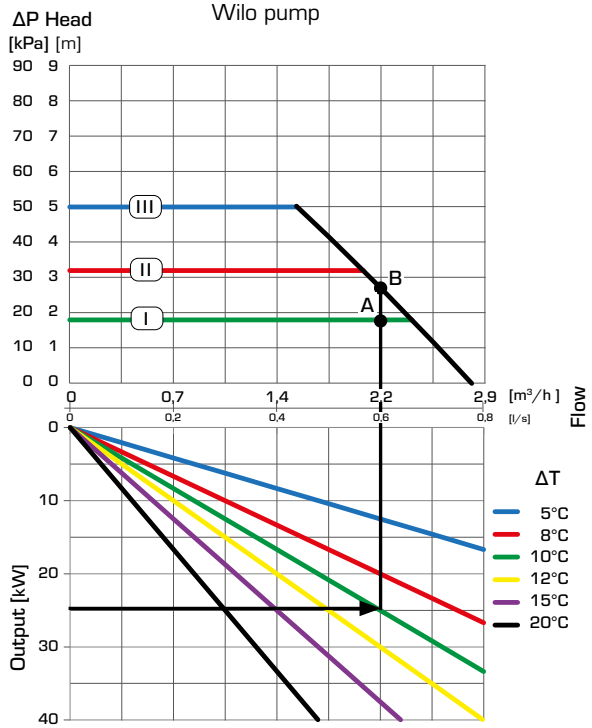

SERIES GDA311 — Variable differential pressure, Wilo pump

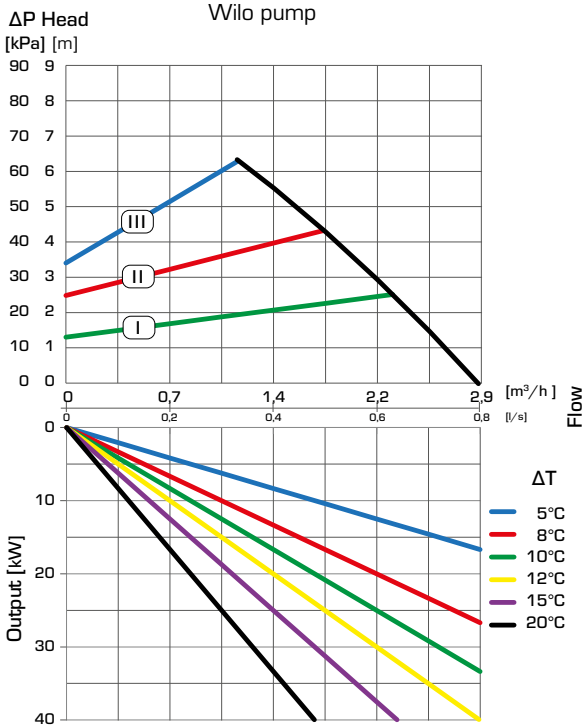

SERIES GDA311 — Ext iPWM 1/ iPWM 2, Wilo pump

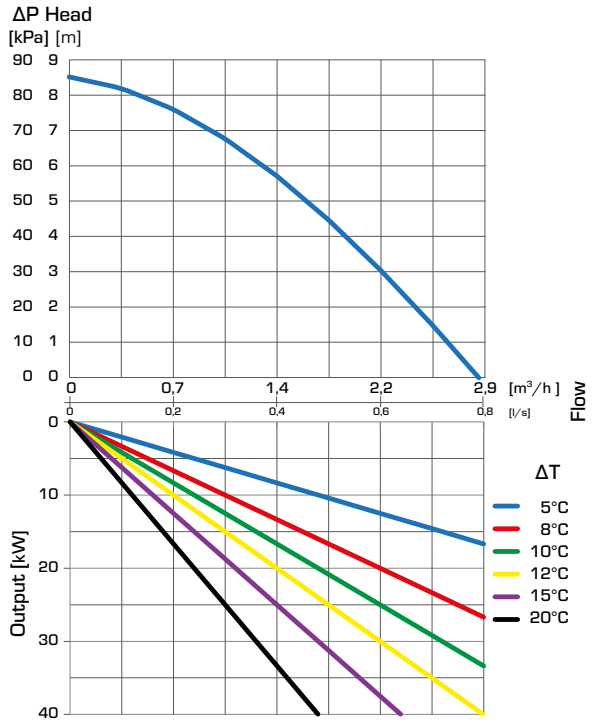

CIRCULATION UNIT
DIRECT SUPPLY, SERIES GDxX00

DIMENSIONING, PUMP CAPACITY DIAGRAM

Example: Start with the heat demand of the heating circuit (e.g. 25 kW) and move horizontally to the right in the diagram to the choosen Δt, which is the temperature difference between flow and return of the heating circuit (e.g. 12°C). Next go up and find the possible duty points.

Setting I gives duty point A with a residual head of 20 kPa. Setting II and III gives duty point B with a residual head of 28 kPa.

SERIES GDA394 — Constant differential pressure, Wilo pump

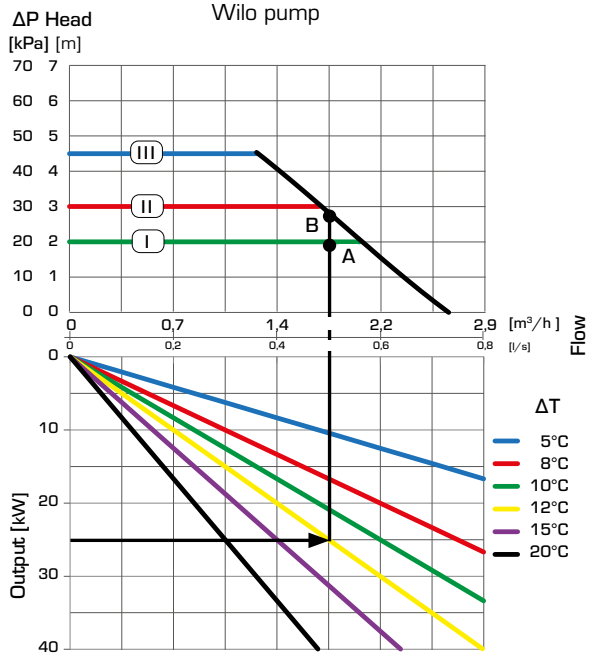

SERIES GDA394 — Variable differential pressure, Wilo pump

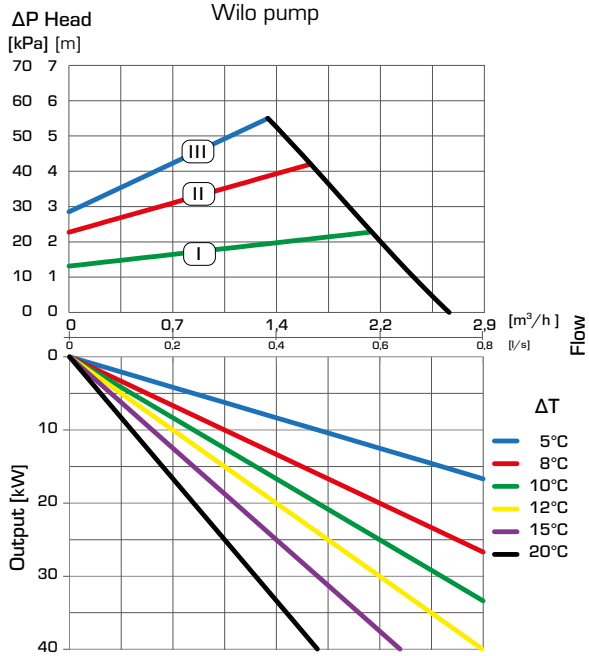

SERIES GDA394 — Constant speed, Wilo pump

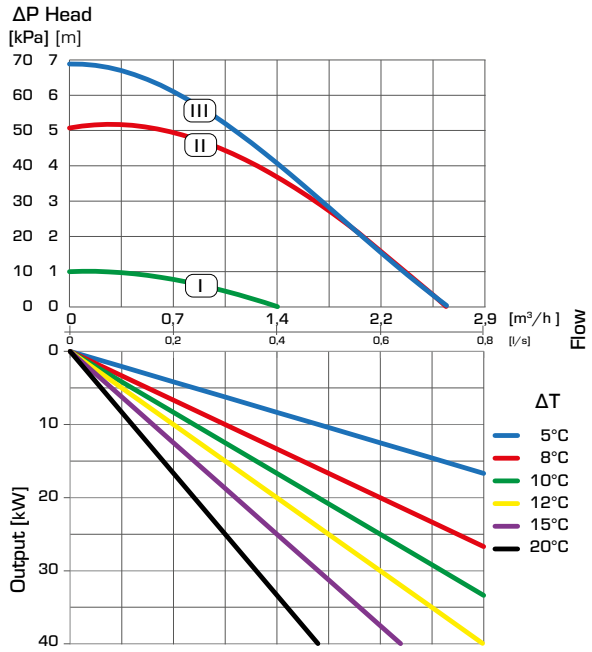

CIRCULATION UNIT
DIRECT SUPPLY, SERIES GDxX00

INSTALLATION EXAMPLES

1

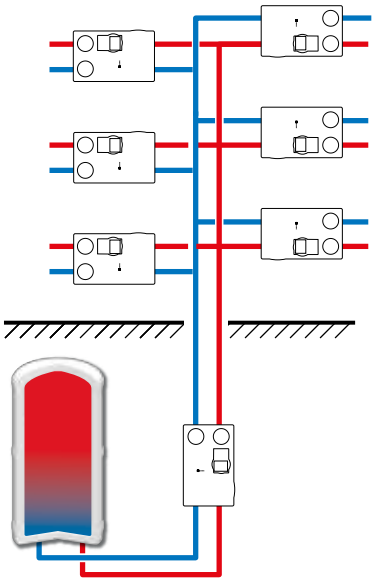

2

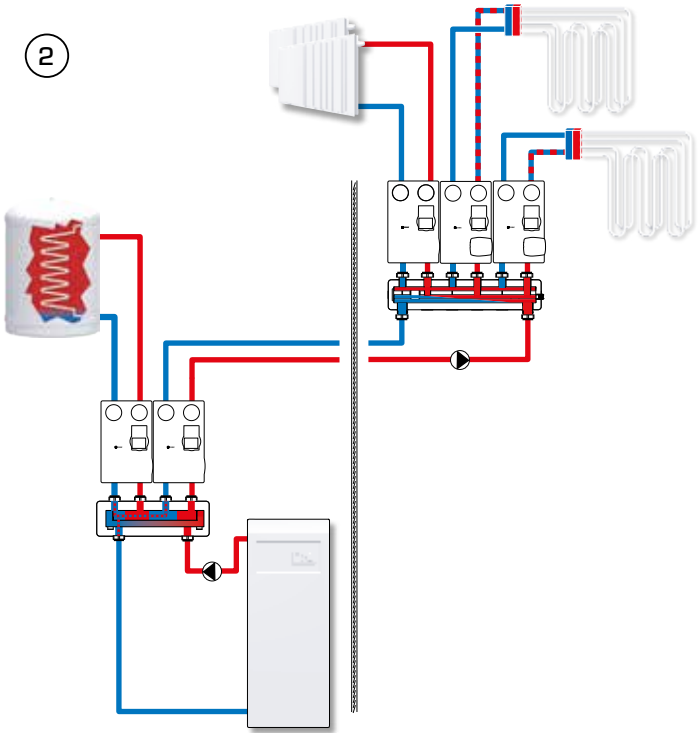

The application shows central heat distribution from a accumulation tank (so called central pump) across the whole building to different zones, for example to each floor level. The main function of the Circulation unit, direct group (GDx) is to supply the heating water with unchanged flow temperature to the other circulation units with mixing function. In this example the Circulation unit Series GDx is used in bigger heating installation where additional central supply pump is needed to overcome the system pressure losses.

The application shows a central heat distribution with boiler and potable water preparation, for example a boiler room. The system is divided into zones, for example in different buildings or floors. The main function of the Circulation unit, direct group (GDx) is to supply the heating water with unchanged flow temperature to the heat receiver, such as a potable water tank, radiators or to the other circulation units with mixing function.

The shown applications are only examples of product use!
Before using the product in any application, the regional and national regulations need to be checked.